INCH-POUND
MIL-PRF-_____
11 Feb 2009

PERFORMANCE SPECIFICATION
DIGITAL MODULAR RADIO (DMR)
200 WATT POWER AMPLIFIER

Revision -

This specification is approved for use by all Departments and Agencies of the Department of Defense.

AMSC N/A FSC 58GP

DISTRIBUTION STATEMENT D. Distribution authorized to DOD and DOD contractors only. The reason for distribution statement is "critical technology". Effective date is TBD. Other requests for this document shall be referred to the Office of Primary Responsibility, Commander, Space and Naval Warfare Systems Command (SPAWAR), 4301 Pacific Highway, San Diego, California 92110, Attention: PMW 179-1.

Destruction Notice: Destroy by any method that will prevent disclosure of contents or reconstruction of this document.

PERFORMANCE SPECIFICATION
DIGITAL MODULAR RADIO
POWER AMPLIFIER

TABLE OF CONTENTS

1. INTRODUCTION 4

1.1 Scope 4

1.2 Background 4

2. APPLICABLE DOCUMENTS 6

2.1 General 6

2.2 Government Documents 6

2.3 Non-Government Publications 8

2.4 Order of Precedence 8

3. REQUIREMENTS 9

3.1 General Function 9

3.2 Interfaces 10

3.3 Operating Frequencies 11

3.4 Modulation Bandwidths 11

3.5 RF Rx Input Requirements 11

3.6 RF Tx Output Requirements 12

3.7 Reported Output Power 13

3.8 Prime Power 13

3.9 Power Consumption 14

3.10 PA Sensors, Alarms, and Warm-up Time 14

3.11 Mechanical Design and Construction 14

3.12 Thermal Design and Construction 15

3.13 Environmental Requirements 15

3.14 Parts, Materials and Processes 16

3.15 Front Panel Color 18

3.16 Electromagnetic Environmental Effects (E^3) 18

3.17 Electrostatic Discharge (ESD) 18

3.18 Safety Criteria 18

3.19 Equipment Identification Plates 19

3.20 Reliability 19

3.21 Maintainability 19

3.22 Workmanship 20

3.23 Software 20

4. VERIFICATION 21

4.1 Conformance Tests and Inspections 21

5. MARKING AND PACKAGING 22

5.1 Marking 22

5.2 Packaging 22

6. NOTES 23

6.1 Intended Use 23

6.2 Acquisition Requirements 23

6.3 Material Safety Data Sheet (MSDS) 23

6.4 Abbreviations and Acronyms 24

1. INTRODUCTION

1.1 Scope. This specification establishes the performance, environmental, and test requirements for the Digital Modular Radio (DMR) 200 Watt radio frequency (RF) Power Amplifier (PA).

1.2 Background. The DMR provides all RF-to-baseband and baseband-to-RF conversion functions required for U.S. Naval line of sight (LOS), skywave and beyond LOS (BLOS), and satellite communications (SATCOM) systems operating between 2.0 MegaHertz (MHz) to 2.0 GigaHertz (GHz) receive and transmit. The DMR is intended to be interoperable with legacy communication systems.

The DMR requires an external RF Power Amplifier (PA) to amplify the low level output signals from DMR before transmission over-the-air. The PA is required to operate with all DMR VHF and UHF LOS modes and all UHF SATCOM modes. This includes amplification of amplitude modulation (AM), frequency modulation (FM), frequency shift keyed modulation (FSK), and phase shift keyed modulation (PSK) in either half-duplex, simplex, or full-duplex configurations and includes the SINCGARS and HAVEQUICK IIA electronic counter-countermeasures (ECCM) modes. The 200 Watt PA will amplify the input signal by a fixed, linear gain up to a minimum of 200 Watts. The gain of the PA will be set manually to provide a maximum of 20 to 200 Watts output power with an input power level from -20 dBm to +15 dBm. The amplified signal is sent to other routing, filtering, and antenna elements. FIGURE I shows a block diagram of a representative PA functionality. For Full Duplex operation we do not plan on running the receive signal through the PA. References in this appendix will be made to the Port Number in FIGURE I to avoid confusion. Some applications could require numerous co-located DMRs and PAs.

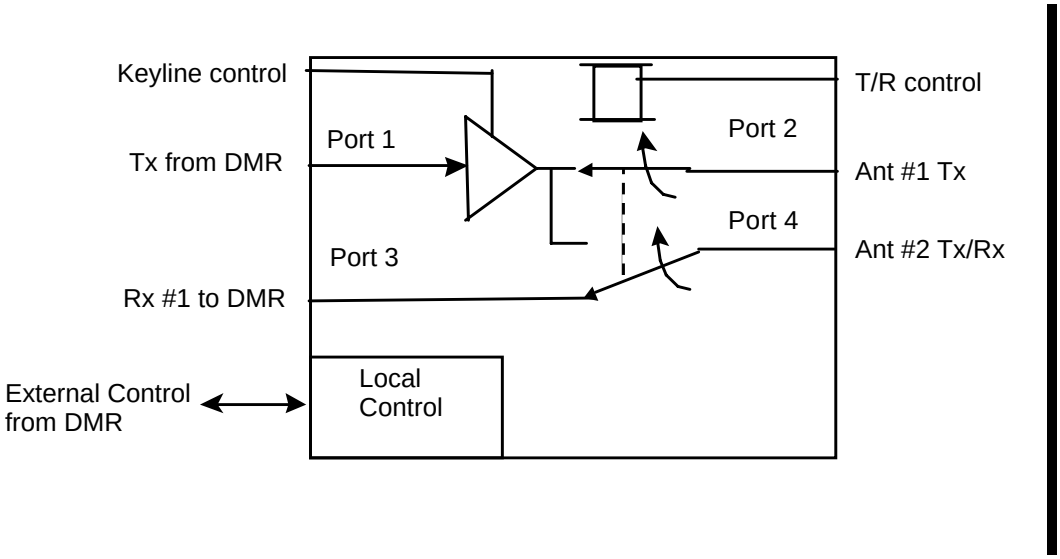

FIGURE I. Notional Functional Block Diagram of the DMR External RF PA

2. APPLICABLE DOCUMENTS

2.1 General. The documents listed in this section are specified in sections 3 through 6 and the appendices of this specification. The exact issue as of the effective date of this specification, unless otherwise noted, of the following documents from the Department of Defense Index of Specifications and Standards (DODISS) forms a part of this specification to the extent specified herein. Other documents listed herein that are not in the DODISS also forms a part of this specification to the extent specified herein. In the event of a conflict between the contents of this specification and the references cited herein, the contents of this specification shall be considered as the superseding requirement. Nothing in this document, however, supersedes applicable laws or regulations unless a specific exemption has been obtained. Copies of federal and military specifications, and standards are available from:

Department of Defense Single Stock Point (DODSSP)
Standards Document Order Desk
700 Robins Avenue, Building 4D
Philadelphia, PA 19111-5094.

Copies of EIA documentation are available from:
Electronic Industries Association
2500 Wilson Boulevard
Arlington, VA 22201.

2.2 Government Documents

2.2.1 Specifications, Standards, and Handbooks. The following specifications, standards, and handbooks form a part of this document to the extent specified herein. Unless otherwise specified, the issues of these documents are those listed in the DODISS and supplement thereto, cited in the solicitation.

SPECIFICATIONS

DEPARTMENT OF DEFENSE

MIL-S-901	Shock Tests, H.I. (High-Impact), Shipboard Machinery, Equipment and Systems, Requirements for

STANDARDS

FEDERAL

FED-STD-313	Material Safety Data, Transportation Data and Disposal Data for Hazardous Materials Furnished to Government Activities

FED-STD-595	Colors Used in Government Procurement

DEPARTMENT OF DEFENSE

MIL-STD-129	Marking for Shipment and Storage
MIL-STD-167-1	Mechanical Vibrations of Shipboard Equipment (For Guidance Only)
MIL-STD-461	Requirements for the Control of Electromagnetic Interference Emissions and Susceptibility
MIL-STD-740-1	Airborne Sound Measurements and Acceptance Criteria of Shipboard Equipment
DOD-STD-1399	Interface Standard for Shipboard Systems - Section 300A - Electric Power, Alternating Current (Metric)
	Interface Standard for Shipboard Systems - Section 070 Part 1 – DC Magnetic Field Environment (Metric)

HANDBOOKS

DEPARTMENT OF DEFENSE

MIL-HDBK-454	Electronic Equipment, General Guidelines for

2.2.2 Other Government Documents, Drawings, and Publications. The following other Government publications, documents, and drawings form a part of the specification to the extent specified herein. Unless otherwise specified, the issues are those cited in the solicitation.

SPAWAR

70-P41401M	Appendix C of the DMR External RF Control Interface, Ethernet Messages
70-P43900J	Appendix W of the DMR External RF Control Interface, Ethernet Message Details for the 100W-A and 200W-A VHF/UHF RF Power Amplifiers

70-P45956F	Installation Control Drawing, DMR, CIA, and Power Amp
70-P46173F	Interface Description Document for the DMR External RF 100W and 200W VHF/UHF High Power RF Amplifiers

NAVAL UNDERSEA WARFARE CENTER (NUWC) DETACHMENT

Environmental Requirements for SSN 688, SSN 21, Trident SSBN, and New SSN Platforms, 30 September 1995

2.3 Non-Government Publications. The following documents form a part of this specification to the extent specified herein. Unless otherwise specified, the issues of the documents, which are DoD adopted, are those listed in the issue of the DoDISS cited in the solicitation.

PUBLICATIONS

ELECTRONIC INDUSTRIES ASSOCIATION (EIA)

EIA RS-471	Symbol and Label for Electrostatic Sensitive Devices
EIA-310-D	Cabinets, Racks, Panels and Associated Equipment

INTERNATIONAL ELECTROTECHNICAL COMMISSION

IEC 1000-4-5	Surge Voltage Immunity Requirements

UNDERWRITERS LABORATORIES, INC. (UL)

UL 1950	Equipment, Safety of Information Technology, Including Electrical Business Equipment (DoD adopted)
UL 101.1	Standard for Safety. Leakage Current for Appliances

2.4 Order of Precedence. In the event of a conflict between the text of this document and the references cited herein, the text of this document takes precedence. Nothing in this document, however, supersedes applicable laws and regulations unless a specific exemption has been obtained.

3. REQUIREMENTS

3.1 General Function. The PA shall be capable of performing two functions, transmit amplification and receive.

3.1.1 Transmit Amplification. The gain of the PA shall be set manually to provide 43 to 53 dBm +/- 1 dBm output power with an input level ranging from -20 dBm to +15 dBm. The PA shall provide manual control of the maximum output power between 43 dBm and 53 dBm in steps that are no greater than 1 dB. The PA shall prevent the output power from exceeding the manually set maximum output power by more than 2 dB. This maximum output power control shall not be changeable at the DMR in order to protect the antenna equipment from overload. The amplified transmit signal shall be routed to the high power transmit output Port 4 for half duplex operation only when the transmit control keyline & Transmit/Receive (T/R) signal are active. The amplified transmit signal shall be routed to the high power transmit output Port 2 for full duplex operation only when the transmit control keyline is active & Transmit/Receive (T/R) signal is not active. The PA shall be capable of transmitting in either a burst mode, as required for push-to-talk or TDMA/DAMA operation, or in a continuous transmit mode. The PA shall support the amplified transmission of the following waveforms through compatible operation with the DMR ITU:

a. UHF military SATCOM half-duplex and full-duplex communications using FM/FSK/PSK, and TDMA/DAMA waveforms

b. UHF LOS half-duplex or full-duplex communications using AM/FM/FSK/PSK waveforms

c. UHF HAVEQUICK IIA ECCM LOS communications

d. VHF LOS half-duplex or full-duplex communications using AM/FM/FSK/PSK waveforms

e. VHF SINCGARS ECCM LOS communications

3.1.2 Receive. The PA shall provide a signal path to connect the antenna multi-coupler or diplexer to the receive signal port. The PA shall provide a minimum of 100 dB isolation in the path from port 4 to port 3 when the T/R control is active. Port 3 may be grounded when the transmit keyline is active. The PA shall support half-duplex LOS communications by providing for a receive signal path between the Tx/Rx Port 4 and Port 3 when T/R control is inactive, including the following waveforms:

a. UHF LOS half-duplex communications using AM/FM/FSK/PSK waveforms

b. UHF HAVE QUICK II ECCM LOS communications

c. VHF LOS half-duplex communications using AM/FM/FSK/PSK waveforms

d. VHF SINCGARS ECCM LOS communications

3.1.3 Transmit/Receive Switching Time. The time to switch from the transmit function to the receive function shall not exceed 125 microseconds. The time to switch from the receive function to the transmit function shall not exceed 125 microseconds. The PA output shall be within 1 dB of the steady state power 125 microseconds after keyed on.

3.1.4 Frequency Change Time. The PA shall tune to a frequency, commanded through the Ethernet port, within 200 microseconds maximum when tuning within a filter band, and 500 microseconds maximum when tuning to a different filter. Tune timing is referenced to 1) an Ethernet message containing a frequency strobe, or 2) an Ethernet message containing a frequency and the tune/store field set to tune.

3.1.5 Automatic Level Control (Optional). Automatic level control (ALC), if implemented, shall support DMR AM waveforms, constant envelope waveforms, frequency hopping waveforms and pulsing waveforms. ALC shall be "ON" at all times by default except when disabled by the Ethernet port ALC mode controls and through the operator control panel. The ALC capture range for input power to the PA shall be a minimum of +/- 3 dB of the input power control selection.

3.2 Interfaces. The PA shall meet the physical, electrical and functional interface requirements in accordance with the Interface Description Document for the DMR External RF 100W and 200W VHF/UHF High Power RF Amplifiers (70-P46173F). The 200W PA ICD shall be in accordance with 70-P45956F.

3.2.1 Low Level Tx Input Interface. The Tx input interface (Port 1) shall have a nominal input characteristic impedance of 50 ohms. The Tx input interface shall have a maximum VSWR of 2.0:1 over the entire operating frequency range except between 70 to 77 MHz and 350 to 400 MHz where the maximum VSWR shall be 2.2:1. The PA shall meet the specifications stated herein for RF carrier input power levels in the +10 dBm to -55 dBm range. The PA shall not be damaged by an RF input power level of less than or equal to +20 dBm.

3.2.2 High Power Tx Output Interface. The Tx output interface shall have a nominal output characteristic impedance of 50 ohms. The PA shall not be damaged or degraded by continuous operation into either an open or a shorted load or any load impedance and associated VSWR.

3.2.3 Rx Output Interface. The Rx output interface (Port 3) shall have a nominal output characteristic impedance of 50 ohms. Each Rx output interface shall have a maximum VSWR of 2.0:1 over the entire operating frequency range except from 70 to 77 MHz and 350 to 400 MHz can have a maximum VSWR of 2.2:1.

3.2.4 Rx Input Interface. The Rx input interface (Port 4) shall have a nominal input characteristic impedance of 50 ohms. Each Rx input interface shall have a maximum VSWR of

2.0:1 over the entire operating frequency range except from 70 to 77 MHz and 350 to 400 MHz can have a maximum VSWR of 2.2:1. The PA shall not be damaged by an RF input power level of less than, or equal to +30 dBm.

3.2.5 Ethernet Control Interface. The PA shall provide an Ethernet 100Base control bus interface compliant with the Appendix C of the DMR External RF Control Interface specification (70-P41401M). The PA shall implement a command interpreter capable of processing the Ethernet messages in 70-P43900J.

3.2.6 External I/O Interface. The PA shall provide three discrete inputs: Duplex, Transmit Enable, Transmit Inhibit and one discrete output: Master Fault, in accordance with 70-P46173F.

3.2.7 Operator Interface. The PA shall provide an operator interface consisting of a control panel and a display panel in accordance with 70-P46173F. The PA shall provide a switch to change Transmit Inhibit I/O pin function between the Surface and Submarine applications per Table **I**.

Table **I**: Transmit Inhibit Function

Direction	Signal	Voltage	Functional Description
Input	TX Inhibit	5V TTL	Surface Applications: Local source of transmit path inhibit: Logic ‘1’ = enables use of the Transmit Keyline control Logic ‘0’ = overrides Transmit Keyline, sets PA to keyOFF Open input is same as logic ‘1’, use of Transmit Keyline is enabled, pulled up to > 3.0 VDC relative to J6 ground pin. Submarine Applications Local source of transmit path inhibit: Logic ‘0’ = enables use of the Transmit Keyline control Logic ‘1’ = overrides Transmit Keyline, sets PA to keyOFF Open input is same as logic ‘1’, use of Transmit Keyline is disabled, pulled up to > 3.0 VDC relative to J6 ground pin.

3.3 Operating Frequencies. The PA shall be fully operational over the frequency range of 30.0 MHz to 400.0 MHz.

3.4 Modulation Bandwidths. The PA shall amplify AM, FM, FSK, and PSK signals on a single continuous carrier, a frequency hopped carrier, and a single burst carrier with modulation bandwidths up to 2 MHz.

3.5 RF Rx Input Requirements

3.5.1 Rx Signal Insertion Loss. The PA shall provide less than or equal to 1.5 dB of

insertion loss in receive mode on the receive signal path defined as Tx/Rx Port 4 to Rx output interface Port 3.

3.5.2 Group Delay. Group delay variation shall be less than +/- 100 nanosecond over any 2-MHz bandwidth within the operating frequencies.

3.5.3 Spurious Emissions. Internally generated spurious emissions measured at the Rx output interface (Port 3), with all other RF interfaces terminated with 50 ohm loads, with Tx inhibited, shall not exceed –118 dBm across the full operating frequency range.

3.6 RF Tx Output Requirements

3.6.1 Power Gain Stability. Once set, the PA shall maintain the fixed power gain within ± 2.5 dB for any transmit input signal between 0 dB and -30 dB from the input level which was used to establish the gain. The power gain for a constant input power shall be maintained within +/- 1 dB across the entire 30.0 MHz to 400.0 MHz range.

3.6.2 Power Output. The PA shall be able to operate continuously with an output power of 53 +/- 1 dBm into a 50 ohm load, and shall not change by more than 1 dB when a 2:1 VSWR load replaces the 50 ohm load**.** The PA shall output 53.5 dBm minimum between 292 MHz and 318 MHz with a 50 ohm load. The PA output power shall not degrade more than 6 dB while operating into a load VSWR greater than 2:1 but less than or equal to 3.5:1. The PA may operate with reduced or no output power when operating with a load VSWR greater than 3.5:1.

3.6.3 Keyline Control Off. The PA average RF output power shall not exceed - 50 dBm when the amplifier is keyed off and the transmit input power level is held constant at 10 dBm. The PA average RF output power shall not exceed - 100 dBm when the amplifier is keyed off and the transmit input power level is held constant at -50 dBm.

3.6.4 Linearity.

3.6.4.1 Gain Variation. The PA output 3 dB power gain compression point shall be greater than 200 Watts. The maximum gain variation from the reference gain level (not including compression) shall be +1.5dB / -1.0dB. The reference gain shall be at an input power level 20 dB lower than the one that is used to establish full rated output power.

3.6.4.2 AM Distortion. The PA shall have no more than 8% distortion with an RF input signal modulated +/- 90% by a 1 kHz sine wave with an AM carrier output power level of 45 Watts and less when tested into a load VSWR of less than 1.2:1, and 35 Watts into a load VSWR less than 2:1, at frequencies from 88 MHz to 400 MHz. The PA shall have no more than 8% distortion with an RF input signal modulated +/- 90% by a 1 kHz sine wave with an AM carrier output power level of 40 Watts and less when tested into a load VSWR of less than 1.2:1, and 30 Watts into a load VSWR less than 2:1, at frequencies from 30 MHz to 88 MHz.

3.6.5 Gain Stability. The PA power gain shall vary by no more than +/- 0.5 dB over the temperature range of 0 degrees Celsius to 50 degrees Celsius referenced to the gain obtained

under room ambient conditions (25 degrees Celsius).

3.6.6 Group Delay. Group delay variation shall be less than +/- 100 nanosecond over any 2-MHz bandwidth within the operating frequencies.

3.6.7 AM to PM Conversion. The AM to PM conversion factor shall not exceed 1.0 degree for any 1 dB RF input amplitude change in the range of input power levels from 0 dBm to -30 dBm for RF output levels of less than 50 dBm.

3.6.8 Spurious Outputs. For a single 200 Watt RF output carrier, the spurious outputs shall be less than -55 dBc within 100 kHz offset from carrier and less than -70 dBc for more than 100 kHz offset from the carrier.

3.6.9 Harmonic Outputs. For a single 200 Watt RF output carrier, all harmonics except the 2nd shall be less than -50 dBc. The 2nd harmonic shall be less than -45 dBc.

3.6.10 Spectral Noise Characteristics. The PA RF output single sided noise spectrum excluding spurious and harmonics for an unmodulated carrier with an input level of greater than –15 dBm shall not exceed an envelope defined in TABLE **II** when using a frequency source equivalent to or better in SSB phase noise performance than the HP8662 and HP8664.

TABLE II. RF Output Spectral Noise Characteristics

Carrier Offset	Single-Sided Spectral Noise Spectrum
10 Hz	-65 dBc/Hz
100 Hz	-75 dBc/Hz
1 kHz	-95 dBc/Hz
10 kHz	-105 dBc/Hz
100 kHz	-120 dBc/Hz
1 MHz	-130 dBc/Hz
10 MHz	-145 dBc/Hz

3.7 Reported Output Power. The PA shall report the average output power level, in the corresponding sensor report, with an overall accuracy of ± 0.5 dB relative to the actual output power level, with a load of 50 ohms, when calibrated with an FM signal at 50 and 53 dBm. This power level shall also be reported at the front panel of the PA.

3.8 Prime Power. Prime power for the PA for shall be Type I, shipboard electric power in accordance with MIL-STD-1399, Section 300A, with additional requirements in subparagraphs a through c below. The PA shall operate from single-phase 115 V. The DMR may shutdown or go

into a standby condition, but shall not be damaged, when operating outside the limits specified below

a. The PA shall operate with nominal power frequency of 50 Hz or 60 Hz.

b. The PA shall operate with emergency line voltage conditions of +30% to –17% for a minimum of 10 minutes. The PA shall operate with emergency line voltage conditions of +30% to –20% for a minimum of 30 seconds.

c. The PA shall retain all operating parameters through any power interruption less than or equal to 100 milliseconds in duration, but may reduce or interrupt its output power for up to 6 seconds. A power interruption is a total loss of frequency or voltage (i.e., condition of -100%).

3.9 Power Consumption. The PA shall require no more than 1350 Watts when transmitting maximum output power. The PA shall require no more than 300 Watts when unkeyed.

3.10 PA Sensors, Alarms, and Warm-up Time.

3.10.1 Thermal Sensors and Alarms. Thermal sensors and over temperature alarms shall be provided within the PA for high thermal loads that could be damaged by prolonged exposure to elevated temperatures. The alarms shall inform the operator of an over temperature condition and specify which thermal load is in alarm. All alarms shall have an override option.

3.10.2 Warm-up Time. The PA shall be fully operational in less than 5 minutes from the time prime power is applied to the PA assuming the PA is warm. Warm equipment is equipment that has been operating continuously for 30 minutes or more and has been without prime power for less than 15 minutes. The PA shall provide a power up restoration sequence that facilitates the emergency transition of a warm PA to full operation in the last operational state in less than 2 minutes. The PA shall be fully operational in less than 30 minutes from the time power is applied to a cold PA. Cold equipment is equipment that has been powered off for the entire previous 15 minutes.

3.11 Mechanical Design and Construction.

3.11.1 Weight. The weight of the PA shall not exceed 36.3 kg (80 lbs).

3.11.2 Size. The PA shall be rack mountable in a 19-in. wide rack as specified in accordance with EIA-310-D. The front panel height shall be a standard EIA-310-D 3U. The PA depth shall be 22.0 inches maximum measured from the rear surface of the front panel to the extreme protrusion of all rear panel components.

3.11.3 Enclosures. Any mounting panels shall conform to EIA-310. The enclosures shall be drip proof to 15°.

3.11.4 Slides. The PA shall be provided with threaded mounting holes designed to accept rack mounting slides compatible with EIA-310-D cabinets. The PA shall be compatible with the recommended slides, Jonathon part number 1451963 (or equivalent). Mounting shall be suitable to allow operation under all conditions specified herein.

3.16.5 Shock Mount. The PA shall be fitted with shock receptacles designed to obtain additional support from rack mounted pins. The PA shall be compatible with the recommended pins, Jonathon part number 210012-4063 (or equivalent).

3.11.6 Dagger Pins. The PA shall be shipped with the shock pins corresponding to the specified shock pin receptacles.

3.12 Thermal Design and Construction.

3.12.1 Cooling. The equipment shall operate without overheating when operation is continuous at maximum specified temperature. If air filters are provided, the filters shall be removable and cleanable. The rise in temperature between the PA air input and air output shall not ever exceed 25° Celsius (C) within one inch of the exhausting surface. If the PA temperature rise exceeds 18 ° Celsius (C) within one inch of the exhausting surface, then a personnel burn hazard warning label shall be placed on the rear panel of the PA.

3.12.2 High Temperature Protection. The PA shall employ fail-safe devices that protect the PA from damage in the event of loss of cooling air or in the event of excessively high ambient temperatures above 50°C. The fail-safe devices shall provide protection when the PA is in any mode. A fail-safe override capability shall be provided. Notification of excessive internal temperature shall be displayed on the operator panel and reported through the Ethernet port prior to initiating shutdown

3.12.3 Personnel Protection. PA handle or knob temperature shall not exceed the limits specified by the thermal and electrical requirements of UL 1950.

3.13 Environmental Requirements. The PA shall operate in a controlled internal environment and perform in accordance with this specification throughout the environmental ranges specified in the following subparagraphs.

3.13.1 Shock. The PA shall conform to the lightweight or medium weight shock requirements of MIL-S-901 for Grade A, Class I or Class II, Type A equipment. Any required resilient mounts shall be internal to the chassis. No chassis or component resonances are allowed at or below 20 Hz with the exception of isolator resonances.

3.13.2 Vibration. The 200 Watt PA shall be tested in accordance with MIL-STD-167-1 Type 1 except with a variable frequency range from 4 to 50 Hz. No chassis or component resonances are allowed at or below 20 Hz with the exception of isolator resonances.

3.13.3 Temperature. The operating temperature range for the PA shall be 0° C to +50° C. The nonoperating temperature limits shall be -40° C and +70° C.

3.13.4 Humidity. The PA shall maintain the specified performance when exposed to a relative humidity of 95 percent noncondensing.

3.13.5 Altitude (Non operating). The 200 Watt PA shall not be damaged when transported in an unpressurized cargo bay of an aircraft at 12.192 kilometers (km) (40,000 feet) altitude for 8 hours.

3.13.6 Inclination. The 200 Watt PA shall meet the inclination requirements of the classified Appendix A to NUWC, Environmental Requirements for SSN 688, SSN 21, TRIDENT SSBN, and New SSN Platforms, dated 30 September 1995.

3.13.7 Airborne Sound. The 200 Watt PA shall comply with airborne sound requirements in classified Appendix A to NUWC, Environmental Requirements for SSN 688, SSN 21, TRIDENT SSBN, and New SSN Platforms, dated 30 September 1995.

3.13.8 Structureborne Noise.. The 200 Watt PA structureborne noise shall be in accordance with NAVSEA 05T2 letter 9073 Ser 05T2/02 dated 18 July 2005, Structureborne Noise Criteria For Forward End Deck Mounted Electronics Equipment.

3.13.9 Fungus. The PA shall not support fungal growth. Previous data or analysis concerning materials employed can be used to validate this requirement.

3.13.10 Sand and Dust. The PA shall withstand, in both operating and nonoperating conditions, the effects of a blowing sand and dust-laden atmosphere. Previous data or analysis concerning materials and filtering employed can be used to validate this requirement.

3.13.11 DC Magnetic Field. The 200 Watt PA shall meet all performance requirements when operating in a dc magnetic field of 20 Oerstads per DoD-STD-1399 Section 070.

3.14 Parts, Materials and Processes. Parts, materials, and processes shall be as specified in the following subparagraphs. Parts selected for the PA shall be in accordance with contractor procedures.

3.14.1 External Electrical or Electronic Connections. External electrical or electronic connections to the PA shall be by use of connectors.

3.14.2 Materials. Use of materials shall be selected and applied in accordance with contractor procedures.

3.14.2.1 Prohibited Materials. Prohibited materials shall not be used. Prohibited materials are listed in TABLE **III** . Exemptions will be considered on a case by case basis.

Table III . Prohibited Materials

Asbestos: asbestos compounds; and asbestos filled compounds
Beryllium and beryllium compounds***

Cadmium
Carcinogens
Chlorofluorcarbons (CFC), that is, freon
Ethylene glycol
Flammable materials
Fragile and brittle materials
Lead and lead compounds **
Lithium and lithium compounds *
Magnesium or magnesium alloys
Mercury or its compounds and amalgams
Phenols and phenolic compounds
Polycarbonated biphenyl (PCB)
Polyvinyl chloride (PVC) except when used as component leads
Radioactive material
Selenium and selenium compounds
Zinc or zinc alloys unless otherwise specified

* Exceptions for Lithium batteries will be considered.
** Lead based solder may be used if a non-lead based solder is not practical.
*** Beryllium-copper compounds may be used for connector contacts.

3.14.2.2 Flammability. PA parts and materials shall be noncombustible or fire retardant in the most hazardous conditions of atmosphere, pressure or temperature to be expected in the application. Fire retardant additives may be used, provided they do not adversely affect the specified performance of the basic materials. Fire retardant shall not be achieved by use of nonpermanent additives to the basic material.

3.14.2.3 Hazardous Material (HAZMAT) and Hazardous Waste Minimization. Any use of potentially HAZMAT with the supplied products shall be approved by the procuring activity. Material Safety Data Sheets (MSDS) must accompany any product containing hazardous material. The use of hazardous and restricted material should conform to Guideline 1 of MIL-HDBK-454. The MSDS shall contain all data required by OSHA Form 174, contained in FED-STD-313.

3.14.2.4 Corrosion Protection. Metals and alloys shall be corrosion-resistant or shall be given a corrosion-resistant treatment or coating. When dissimilar metals are assembled in intimate contact with each other, an interposing material compatible to both shall be used. Insulating material is not required between corrosion-resistant steel inserts and aluminum castings when the inserts are integrally cast in the aluminum.

3.14.3 Processes.

3.14.3.1 Painting. Interior and exterior surfaces of metallic enclosures shall be painted or nickel plated to withstand the environmental requirements previously stated. The interior of treated aluminum enclosures for sheltered locations need not be painted. Prior to painting, surfaces shall be cleaned and primed. Plastic enclosures normally will not be painted.

3.14.3.2 Protective Coatings. A protective plating or coating shall be applied to all metals that are not corrosion-resistant, except those which are potted, encapsulated, or sealed, or when electronic grounding through the surface is required.

3.15 Front Panel Color. The front panel of the PA shall be finished in Color Number 26270 per FED-STD-595.

3.16 Electromagnetic Environmental Effects (E^3). The PA chassis shall be designed using best commercial practices such as RFI gaskets to provide shielding against Radio Frequency Interference (RFI). The interface connectors shall have metal caps for RFI shielding when connectors are not being used unless the PA can meet the electromagnetic susceptibility requirements with the connector pins exposed

3.16.1 Electromagnetic Emissions. The 200 Watt PA, using the assumptions stated herein, shall be in accordance with MIL-STD-461D emission requirements CE101, CE102, CE106, RE101, and RE102, except CE102 specification for the 200 watt PA shall be relaxed by 6 dB from 140 kHz to 150 kHz. For calculating requirements of MIL-STD-461, 200 watts should be used as output power for the PA. For CE106, it can be assumed that the shipboard coupler will provide an additional 30 dB attenuation to harmonics and 10 dB attenuation to spurious outputs at frequency offsets greater than 5% from the carrier.

3.16.2 Electromagnetic Susceptibility. The 200 Watt PA shall comply with MIL-STD-461D susceptibility requirements CS101, CS103, CS104, CS109, CS114, CS115, CS116, RS101, and RS103.

3.16.3 Surge and Lightning Protection. The PA performance shall comply with this specification and shall not be degraded after the power input pins are subjected to the 2500 volt spike test in accordance with MIL-STD-1399 Section 300A paragraph 5.3.3. The PA performance shall comply with this specification and shall not be degraded after the antenna ports are subjected to two 8/20us current surges separated by a minimum of 1 hour with a peak of 870 volts and a pulse energy of 600 micro-joules in accordance with IEC 1000-4-5.

3.16.4 Insulation Resistance. The PA shall not be damaged as a result of applying 500 Vdc to the AC power leads, when the PA is not powered, for approximately one minute under room ambient conditions. Verification of this requirement allows removal pf protection devices (e.g., surge or lightning) that activate at lower voltages.

3.17 Electrostatic Discharge (ESD). All ESD sensitive components shall be protected from damage by handling during installation, maintenance or normal operation. ESD sensitive circuits shall be isolated or otherwise protected at connector interfaces. Special handling procedures shall not be required unless previously approved in accordance with the contract or order.

3.18 Safety Criteria. The PA shall conform to the safety criteria of UL 1950.

3.18.1 Leakage Current. The PA leakage current shall be less than 5 mA when tested in accordance with UL101.1..

3.18.2 Safety Ground, Power Cable Assemblies. In power cable assemblies that connect to convenience outlets, a safety ground conductor shall be included in the assemblies.

3.18.3 Safety, Electromagnetic (EM) Radiation Hazardous to Personnel. Any system condition that could expose personnel to hazardous EM radiation levels shall either be prevented by electrical interlocks or provided with suitable visible warning labels.

3.19 PA Identification Plates. Identification plates for the PA shall be provided. Nomenclature lettering on these identification plates shall be a minimum of 0.25 inches in height. Identification plate attachment by removable machine screws is preferred, but attachment by other means is allowed when approved by the contract or delivery order when adverse modification to commercial off-the-shelf (COTS) items would result. Identification plates shall be located on the front of units with the system or set and group plates on a major contractor-furnished unit. Unit plates shall be placed on each major unit. Existing vendor identification plates, which satisfy this requirement, may be utilized upon approval of the Government

3.19.1 Nomenclature. Nomenclature (item name and type designation) for the PA will be established by the government prior to initial government acceptance. The assignment of type designations does not constitute approval of the PA and does not waive any requirement of the contract involved, nor does the approval of the PA constitute approval of the type designation assignment.

3.19.2 Serial Numbers. Serial numbers shall be unique to each unit of equipment. Serial numbers shall be furnished by the vendor for non-developmental item (NDI) equipment.

3.20 Reliability. The PA shall have a minimum Mean Time Between Failures (MTBF) of 16,000 hours.

3.21 Maintainability.

3.21.1 Maintenance Design. The maintenance concept for repair of failures shall be replacement of the PA to restore the system to operational readiness. Built-in-test (BIT) and built-in-test equipment (BITE) shall be used as specified in 3.21.1.1 through 3.21.1.4. The PA shall be replaceable without cutting any wires or unsoldering any connections.

3.21.1.1 Built-in-Test (BIT) Provisions. During PA operations the internal test and diagnostic BIT provisions shall be capable of fault detection of at least 95% of all faults. The BIT false alarm rate shall not exceed 1%.

3.21.1.2 Protection from BIT and BITE Failures. Malfunction of either BIT or built-in-test equipment (BITE) shall not prevent the PA from operating in accordance with all other requirements of this specification.

3.21.1.3 BIT Indicators. The detection of out of tolerance performance shall be displayed on the operator interface, reported through the Ethernet I/O port and indicated on the discrete (EXT I/O) Master Fault output.

3.21.1.4 BIT Control. BIT shall not inhibit any PA operational mode or function without operator approval.

3.22 Workmanship. The PA shall use Guideline 9 of MIL-HDBK-454 for guidance.

3.23 Software.

3.23.1 Download Capability. The PA shall provide download capability for all field-programmable devices. Download applies to all programmable storage or FPGA components. Software and FPGA version information shall be embedded into the applicable software product and accessible through the Ethernet port. Version IDs shall be formatted as MM.FF.DD. "MM" indicates a major revision, which requires synchronous hardware/software releases, or is not backward compatible with previous releases. "FF" indicates an added feature or function. "DD" indicates defect repair.

3.23.2 Download Fault Tolerance. The PA software download function shall be tolerant of faults, such as corrupted data files, incomplete data files, interruptions of Ethernet service during the download, and power interruptions during device programming. The software download function shall be capable of recovering from a corrupted download and accept a new field download without operator intervention or the need to perform factory level programming.

3.23.3 Programmable Device Reserves. All PA field-programmable devices shall have a minimum of 100% reserve storage capacity referenced to the first production version of the PA.

3.23.4 Software System Reserves. All PA data processing components shall have a minimum 100% reserve performance capacity referenced to the first production version of the PA.

3.24 Calibration. If the PA has the capability of being calibrated, regardless of the means, the government shall be provided all information necessary to perform such calibration including, but not limited to, data format and protocol, passwords, internal software, and software for external calibration equipment.

3.25 Information for Assembly Repair and Replacement. The government shall be provided all PA schematics, parts lists and other information required for repair of assemblies manufactured by the prime contractor.

4. VERIFICATION

4.1 Conformance Tests and Inspections. Conformance inspections consist of: (1) tests which shall prove the workmanship and reveal any errors or omissions in the production process and; (2) functional and performance tests which shall demonstrate compliance with the performance specification and the SOW at a limited number of test points.

5. MARKING AND PACKAGING

5.1 Marking. Marking shall be as specified in 5.1.1 through 5.1.5. Unless otherwise specified, marking shall be in accordance with MIL-STD-129.

5.1.1 Marking of ESD Sensitive Components. Enclosures, assemblies, and subassemblies containing ESD sensitive components, parts or assemblies shall be marked with the EIA RS-471 ESD symbol. An ESD warning plate as shown on Figure II shall be readily visible to personnel prior to gaining access to ESD sensitive parts or assemblies. Warning labels shall be affixed to the protective packaging and to the equipment.

CAUTION THIS EQUIPMENT CONTAINS PARTS AND ASSEMBLIES SENSITIVE TO DAMAGE BY ELECTROSTATIC DISCHARGE (ESD). USE PRECAUTIONARY PROCEDURES WHEN TOUCHING, REMOVING OR INSERTING.

FIGURE II. Electrostatic Discharge Warning.

5.1.2 Weight Marking. The PA shall have the weight clearly marked on the external surface of the equipment and readily visible during installation and removal. The marking shall be as permanent as the normal life expectancy of the unit to which it is applied.

5.1.3 Marking of Hazardous Parts. All parts containing HAZMAT (for example, beryllium oxide insulators) shall be labeled in accordance with the Occupational Safety and Health Administration (OSHA) Standard, Code of Federal Regulations (CFR), Title 29, Part 1910.1001 to Part 1910.1101, Part 1910.1200, subpart Z, and appropriate Environmental Protection Agency and Department of Transportation requirements.

5.1.4 Personnel Hazard. Accessible surfaces on which temperatures may jeopardize operator safety as specified in the thermal and electrical requirements paragraphs of UL 1950, or other consensus standards for this type of equipment shall be labeled with a temperature hazard warning. The temperature differential between the front panel, the operating controls and the equipment enclosure and the compartment ambient temperature shall not exceed 10°C.

5.2 Packaging

The packaging requirements shall be as specified in the contract or order.

6. NOTES

This section contains information of a general or explanatory nature that may be helpful, but is not mandatory.

6.1 Intended Use. The intended use of the PA is to satisfy the 30 MHz - 400 MHz LOS and SATCOM requirements for DMR RF power amplification on all Naval ships, submarines, and shore installations

6.2 Acquisition Requirements. The acquisition documents should specify the following:

a. Title, number, and date of this specification.

b. Issue of the DoDISS to be cited in the solicitation, and if required, the specific issue of individual documents referenced (see section 2).

c. Packaging requirements (see section 5).

6.3 Material Safety Data Sheet (MSDS). The MSDS shall contain all data required by OSHA Form 174, contained in FED-STD-313. The MSDS shall be included with each shipment for the material covered in the end item specification. The contracting activity shall be provided with a MSDS at a time of submittal of bid for each HAZMAT.

6.4 Abbreviations and Acronyms

ac	alternating current
AM	amplitude modulation
BIT	built-in test
bps	bits per second
C	Celsius
dB	decibel
dBc	decibels referenced to the carrier signal
dBm	decibels referenced to 1 milliwatt
dBW	decibels referenced to 1 watt
DMR	digital modular radio
FM	frequency modulation
FSK	frequency shift keying
GHz	Gigahertz
HAZMAT	hazardous material
Hz	Hertz (cycles per second)
LOS	line-of-sight
LRU	line replaceable unit
MHz	Megahertz
PA	power amplifier
PSK	phase shift keying
RF	radio frequency
SATCOM	satellite communications
SINCGARS	single channel ground and airborne radio system
TDMA	time division multiple access
UHF	ultrahigh frequency
VHF	very high frequency
VSWR	voltage-standing wave ratio

Preparing activity:
Navy - EC
(Project No _____-_____)