REVISION HISTORY			
REV	DESCRIPTION	DATE	APPROVED
XA	ENGINEERING CONTROL	00-08-31	J HENDERSON
XB	SEE MCO F41155	00-11-07	J HENDERSON
XC	SEE MCO F41338	01-05-03	H CHUNG
XD	SEE MCO H41443	03-03-04	H CHUNG

CAD MAINTAINED. CHANGES SHALL BE INCORPORATED BY THE DESIGN ACTIVITY.

NOTES:

1. HOLES ARE 1/4-20UNC-3B, ↧.370 AND MAY BE USED TO ATTACH LIFTING OR HANDLING DEVICES. MAXIMUM WEIGHT TO BE APPLIED TO EACH HOLE SHALL NOT EXCEED 110 LBS.

2. HOLES ARE #10-32UNF-2B, ↧.285 AND MAY BE USED TO ATTACH LIFTING OR HANDLING DEVICES. MAXIMUM WEIGHT TO BE APPLIED TO EACH HOLE SHALL NOT EXCEED 55 LBS.

3. TORQUE USED TO INSTALL MATING CONNECTORS SHALL BE 8.0 TO 9.7 IN-LBS.

4. TORQUE APPLIED TO INSTALL JACKSCREWS ON MATING CONNECTORS SHALL BE 2.5 TO 3.5 IN-LBS.

5. MOUNTING SCREWS INSTALLED IN THESE HOLES TO ASSEMBLE UNIT INTO RACK SHALL BE TORQUED TO 30 TO 33 IN-LBS.

6. NOT USED.

7. AFTER INSTALLATION OF GROUND STRAP, TORQUE TO 24 TO 26 IN-LBS.

8. FOLLOWING INSTALLATION OF POWER CORD (NOT SHOWN), INSTALL SCREWS ON POWER CORD RETAINER INTO HOLES SHOWN. TORQUE TO 5 TO 9 IN-LBS.

9. ELECTRICAL POWER REQUIRED IS 115 VAC, 50/60 HZ, SINGLE PHASE. MAXIMUM CURRENT IS 16 AMPERES.

10. HANDLES MAY BE USED TO AID INSTALLATION AND HANDLING OF UNIT. MAXIMUM ALLOWABLE FORCE APPLIED TO EACH HANDLE SHALL NOT EXCEED 100 LBS. FOLD HANDLES DOWN PRIOR TO FINAL INSTALLATION IN RACK.

11. AS INSTALLED IN THE RACK, A MINIMUM OF 1.75 INCHES SPACE SHALL BE MAINTAINED ABOVE THE DMR AND 1.75 INCHES BELOW THE DMR FOR COOLING AIRFLOW. THIS APPLIES TO EACH DMR IN THE RACK, SO THAT INSTALLATION OF TWO DMR'S NEXT TO EACH OTHER WOULD REQUIRE A MINIMUM OF 3.5 INCHES BETWEEN DMRS.

12. MOUNTING SCREWS INSTALLED IN THESE HOLES SHALL BE #10-32UNF-2A, CRES 300 SERIES, SELF-LOCKING PATCH. (LENGTH TO BE DETERMINED BY RACK ADAPTER) SCREWS SHALL BE TORQUED TO 36 TO 39 IN-LBS.

13. DO NOT BLOCK AIRFLOW IN FRONT OR REAR OF POWER AMPLIFIER.

14. SLIDES ON POWER AMPLIFIER ARE JONATHAN MANUFACTURING P/N: 1451963-L/R. SLIDES ARE NOT PROVIDED WITH POWER AMPLIFIER.

15. UNIT SERIAL NO. 1 WILL INCLUDE A COMMEMORATIVE PLATE.

16. LABEL WILL BE APPLIED IN AREA INDICATED.

17. RECOMMENDED HARDWARE: #10-32UNF-2A FLAT HEAD SCREWS. (LENGTH TO BE DETERMINED BY RACK ADAPTER).

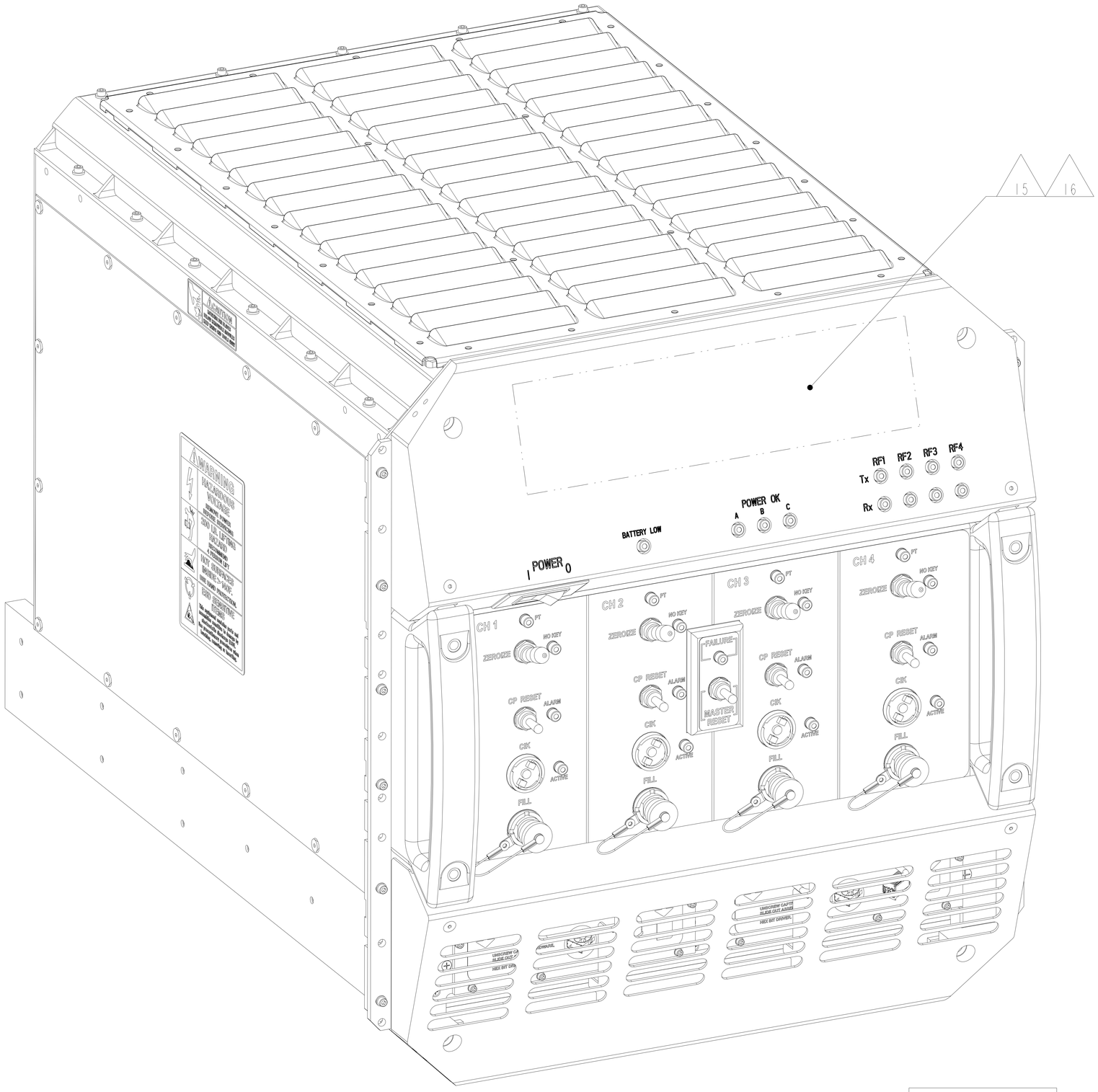

CURRENT DESIGN ACTIVITY
CAGE CODE 1VPW8
GENERAL DYNAMICS
SCOTTSDALE, ARIZONA 85252-1417

© MOTOROLA, INC. ON THE ORIGINAL ISSUE AND REVISION DATES HEREON ALL RIGHTS RESERVED.

ALL SHEETS ARE THE SAME REVISION STATUS.

SYM	SIZE	QTY
	HOLE LIST	

NONE	WITS 6004
NEXT ASSY	USED ON
APPLICATION	

UNLESS OTHERWISE SPECIFIED: DIMENSIONS ARE IN INCHES TOLERANCES ON:
1 PLACE ±0.1 2 PLACE ±0.02 3 PLACE: ±0.005
ANGLE ±N/A
THIRD ANGLE PROJECTION

CONTR	15389	
ISS	F40500-362(XA)00-08-31	
APPROVALS		
DWN	Rich Johnson	00-08-18
CHKR		
QA	D McCOMB	00-09-01
MATL	T WOODBURN	00-08-31
MFG	K CHANEY	00-08-31
ENG	J HENDERSON	00-08-31
CUST		

MOTOROLA, INC.
SCOTTSDALE, ARIZONA 85252-1417

TITLE
INSTALLATION CONTROL DRAWING, WITS 6004

SIZE	CAGE CODE	DWG NO
E	94990	70-P45956F

SCALE 0.900 WT SHEET 1 OF 9

DWG NO 70-P45956F SH 1

ASME Y14.1-1995 DRAWING FORMAT - 3/97

MODEL: 70-P45956F

Pro/E: 70-P45956F

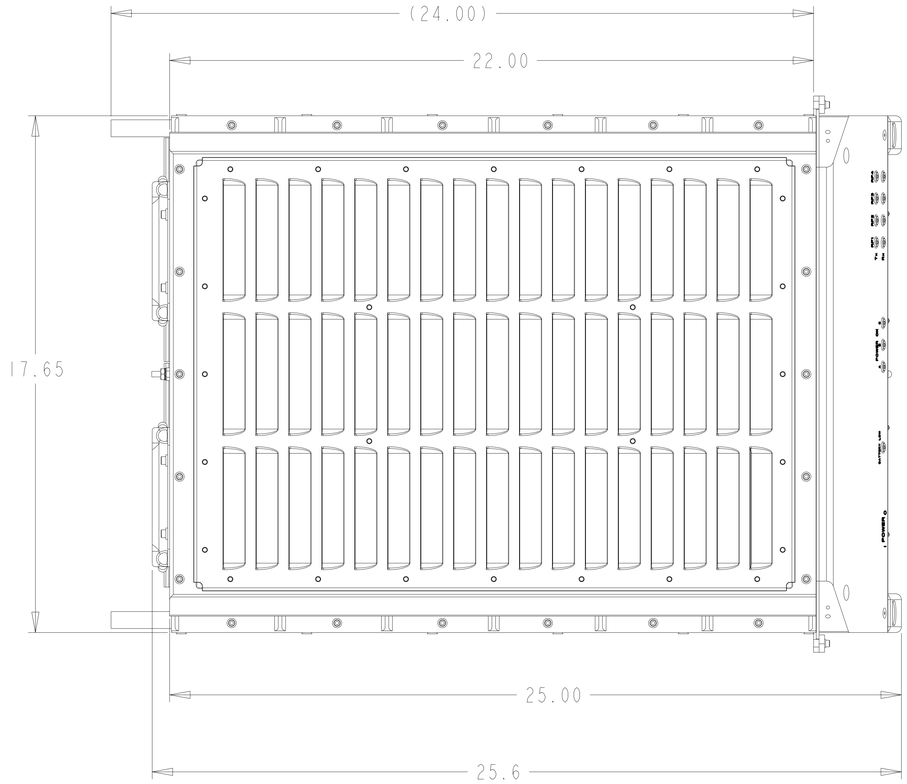

MAXIMUM WEIGHT: 210 POUNDS

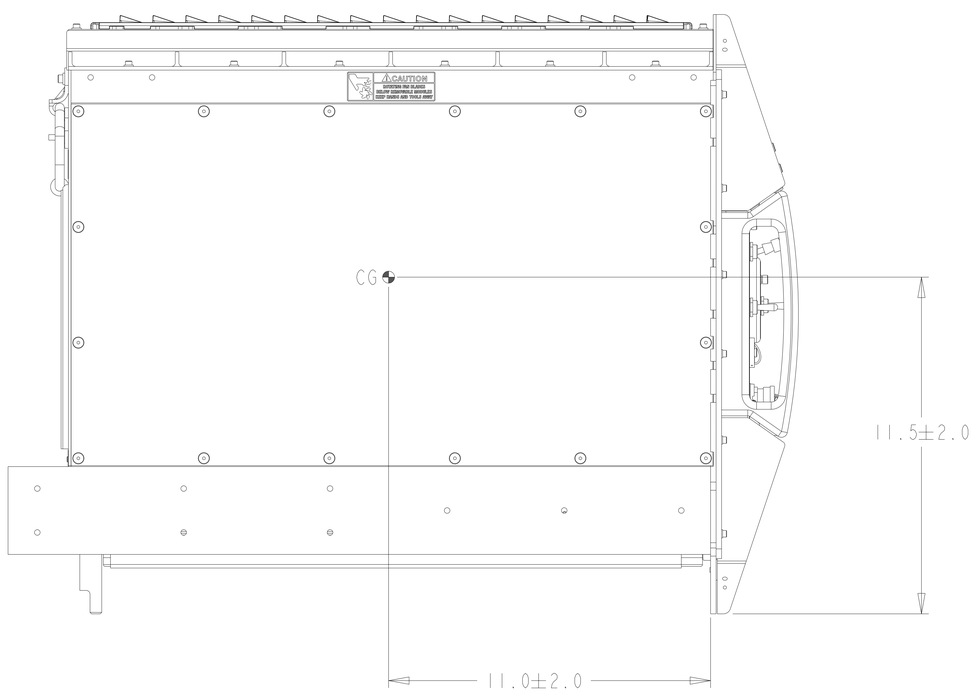

(SIDE LABEL NOT SHOWN FOR CLARITY.)

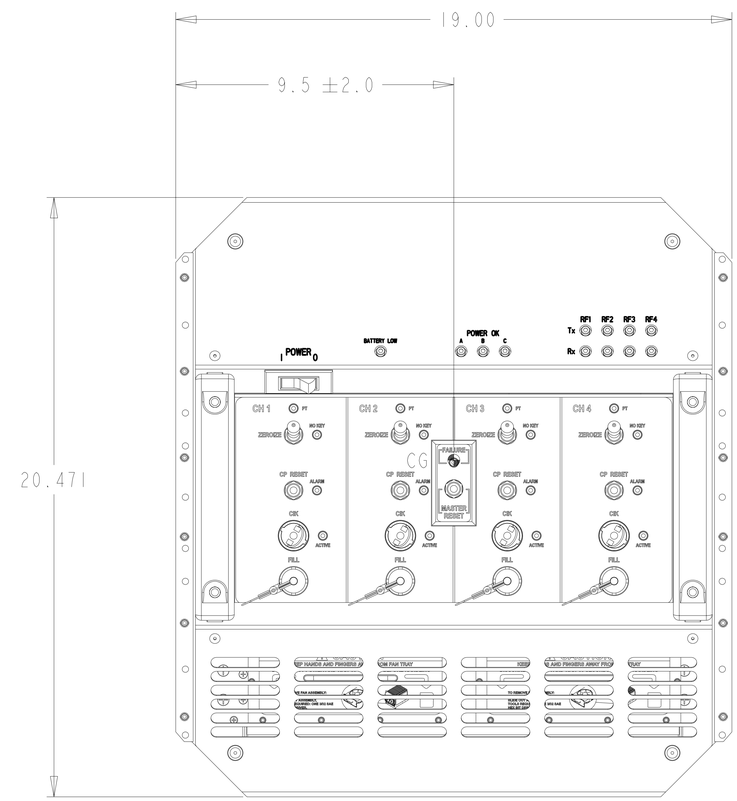

SIZE	CAGE CODE	DWG NO	REV
E	94990	70-P45956F	XD
SCALE 0.500	WT	SHEET 2 OF 9	

DWG NO 70-P45956F SH 2

ASME Y14.1-1995 DRAWING FORMAT - 3/97

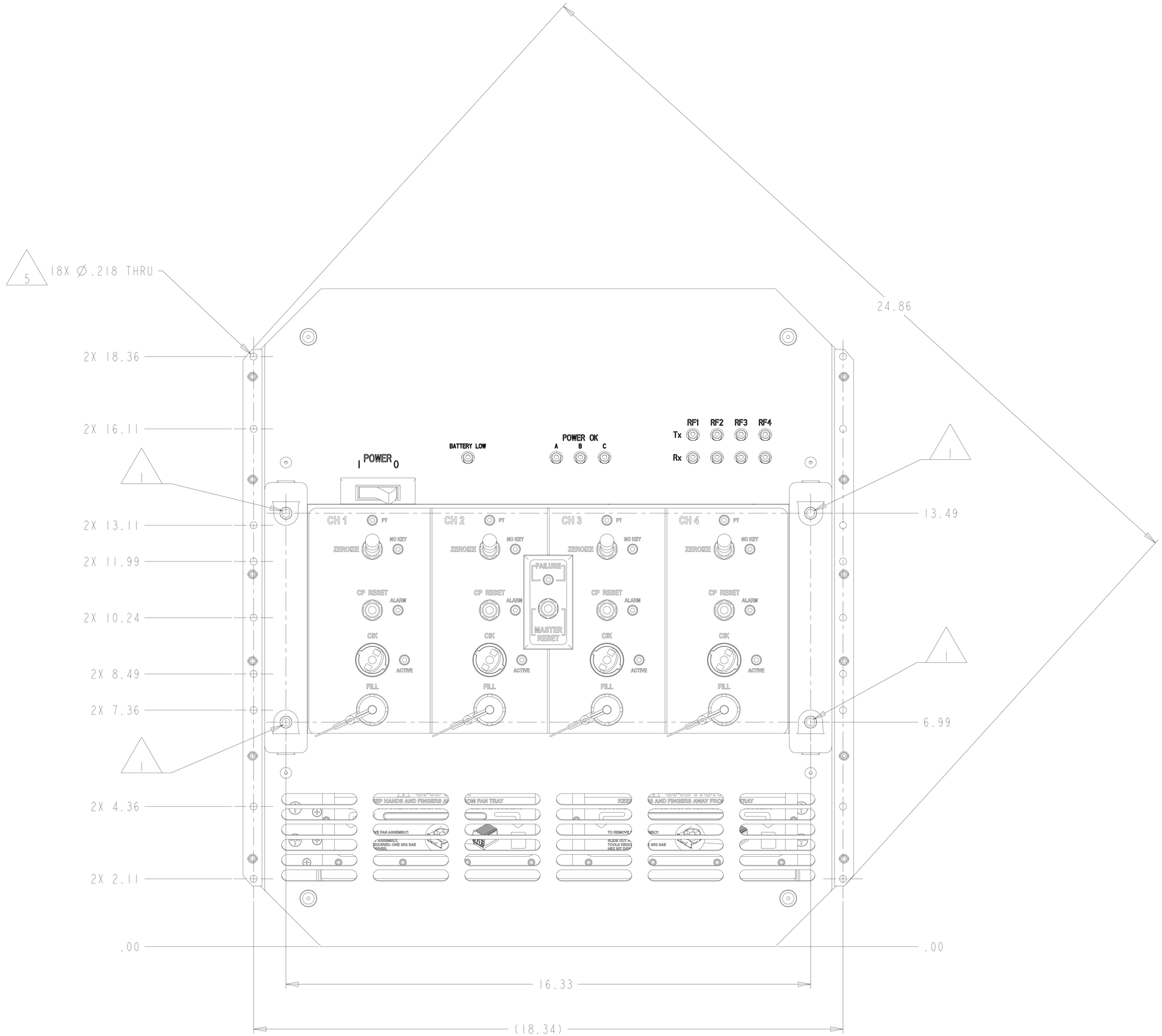

FRONT VIEW OF DMR

SIZE	CAGE CODE	DWG NO	REV
E	94990	70-P45956F	XD
SCALE 0.900	WT		SHEET 3 OF 9

ASME Y14.1-1995 DRAWING FORMAT - 3/97

DWG NO 70-P45956F SH 3

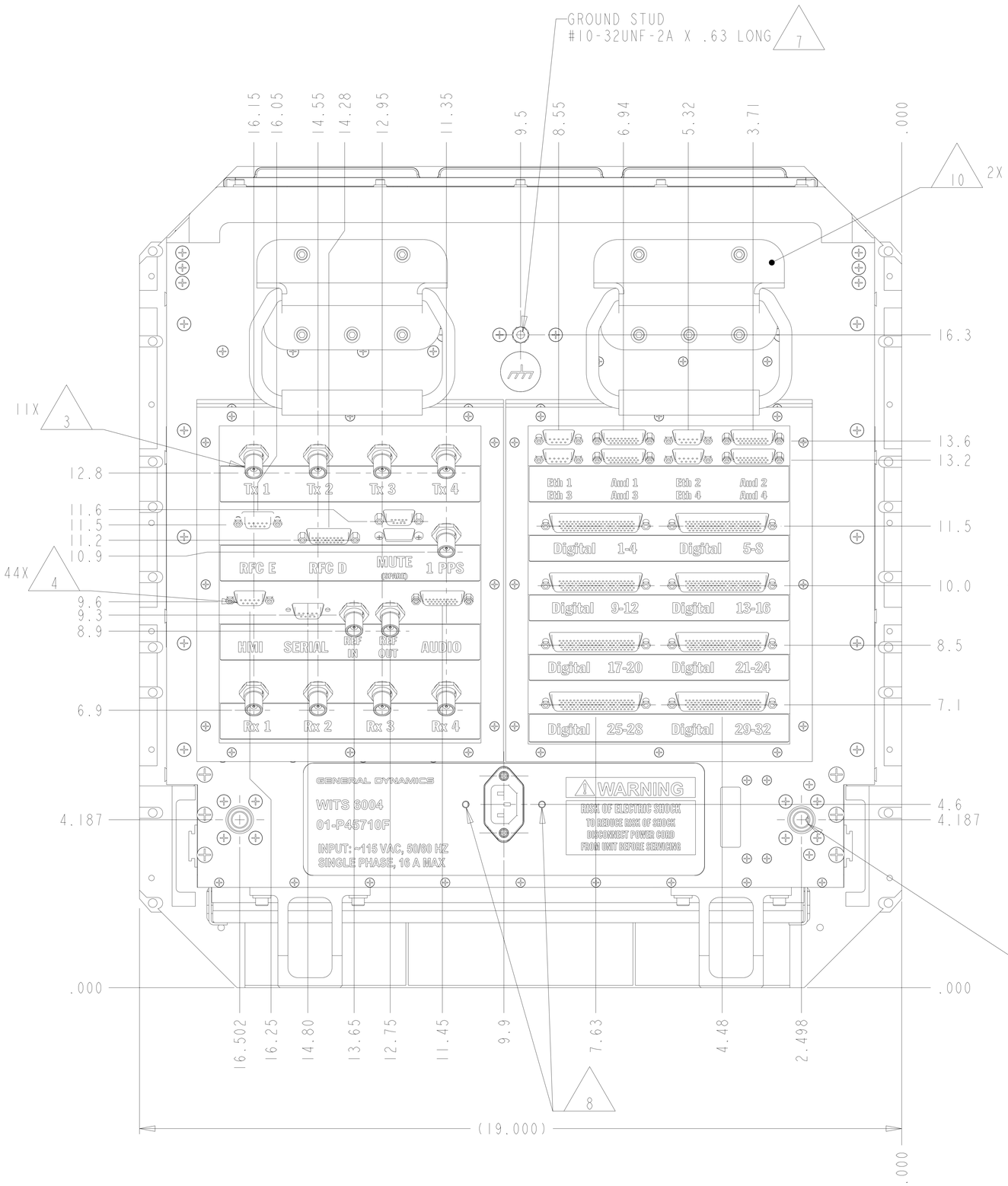

REAR VIEW OF DMR

2X Ø.377 +.003 -.000
↧ .80
DAGGER PIN RECEIVERS

SUGGESTED DAGGER PIN:

Ø.375 +.000 -.005 X 1.00 LONG

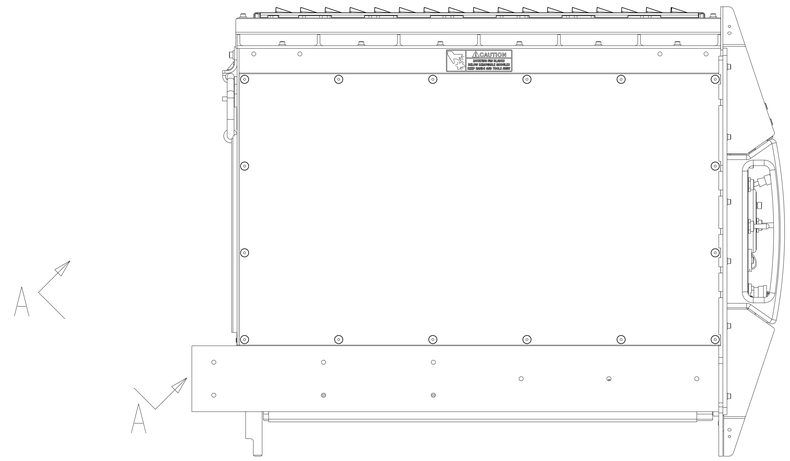

SCALE 0.375

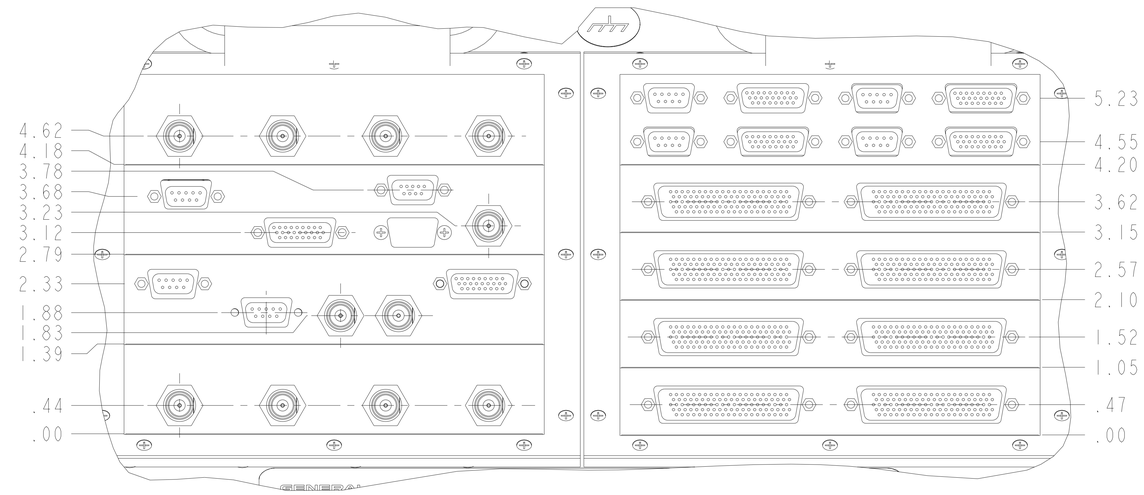

VIEW A-A
SCALE 1.100

CONNECTOR ROW
SPACING DETAILED FOR
CABLING AND BACKSHELL
INTERFACE CLEARANCES.

SIZE	CAGE CODE	DWG NO	REV
E	94990	70-P45956F	XD
SCALE 0.900	WT		SHEET 4 OF 9

DWG NO 70-P45956F SH 4

ASME Y14.1-1995 DRAWING FORMAT - 3/97

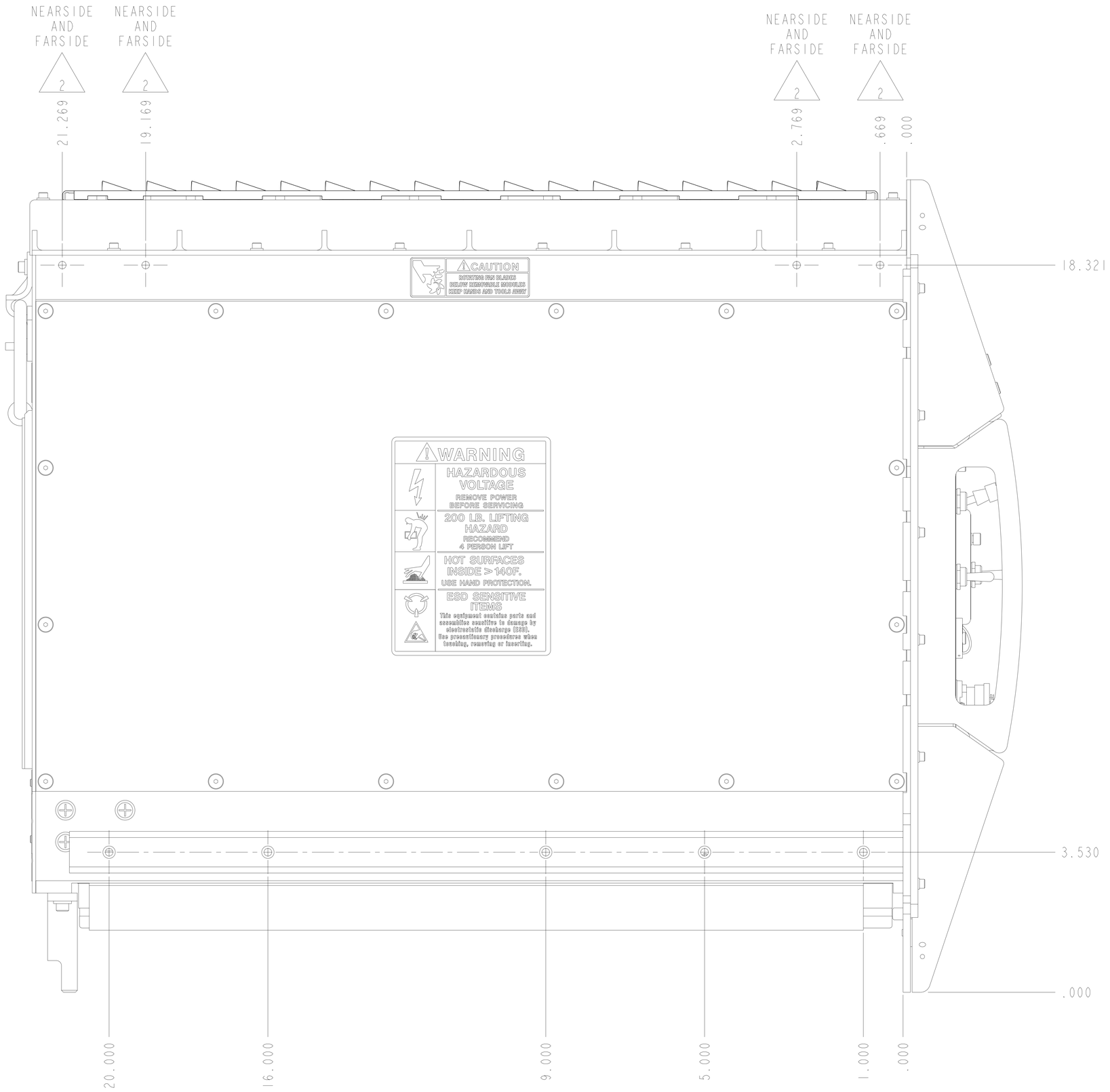

DIMENSIONS OF SLIDE MOUNTING HOLES TO DMR

(LEFT SIDE SHOWN, RIGHT SIDE IS MIRROR IMAGE)

SIZE	CAGE CODE	DWG NO	REV
E	94990	70-P45956F	XD
SCALE 1.000	WT	SHEET 5 OF 9	

DWG NO 70-P45956F SH 5

ASME Y14.1-1995 DRAWING FORMAT - 3/97

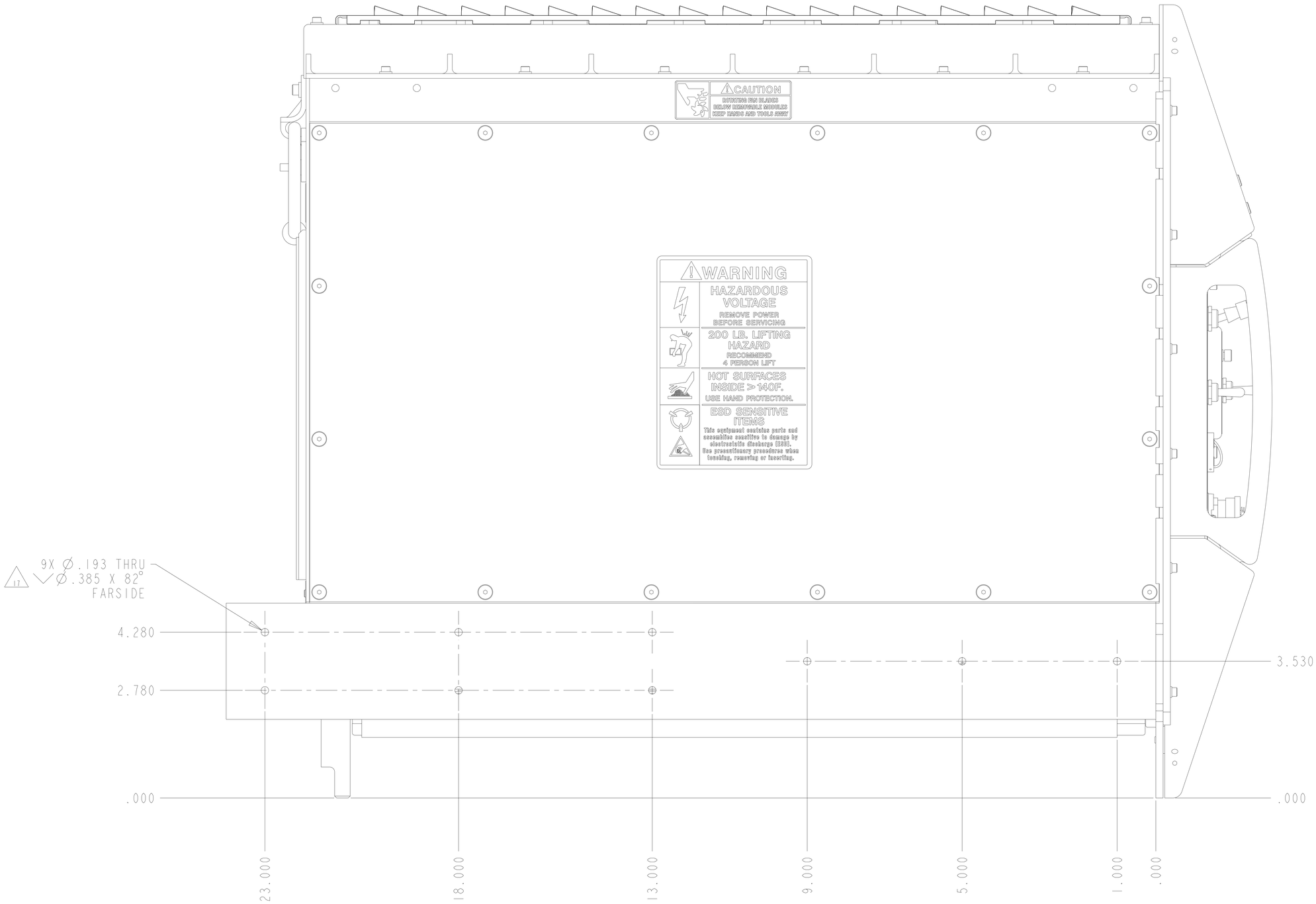

DIMENSIONS OF SLIDE MOUNTING HOLES TO RACK ADAPTER

NOTE: CUSTOM RACK ADAPTER REQUIRED PER SPECIFIC RACK OUTLINE
(LEFT SIDE SHOWN, RIGHT SIDE IS MIRROR IMAGE)

SIZE	CAGE CODE	DWG NO	REV
E	94990	70-P45956F	XD
SCALE 1.000	WT		SHEET 6 OF 9

DWG NO 70-P45956F SH 6

ASME Y14.1-1995 DRAWING FORMAT - 3/97

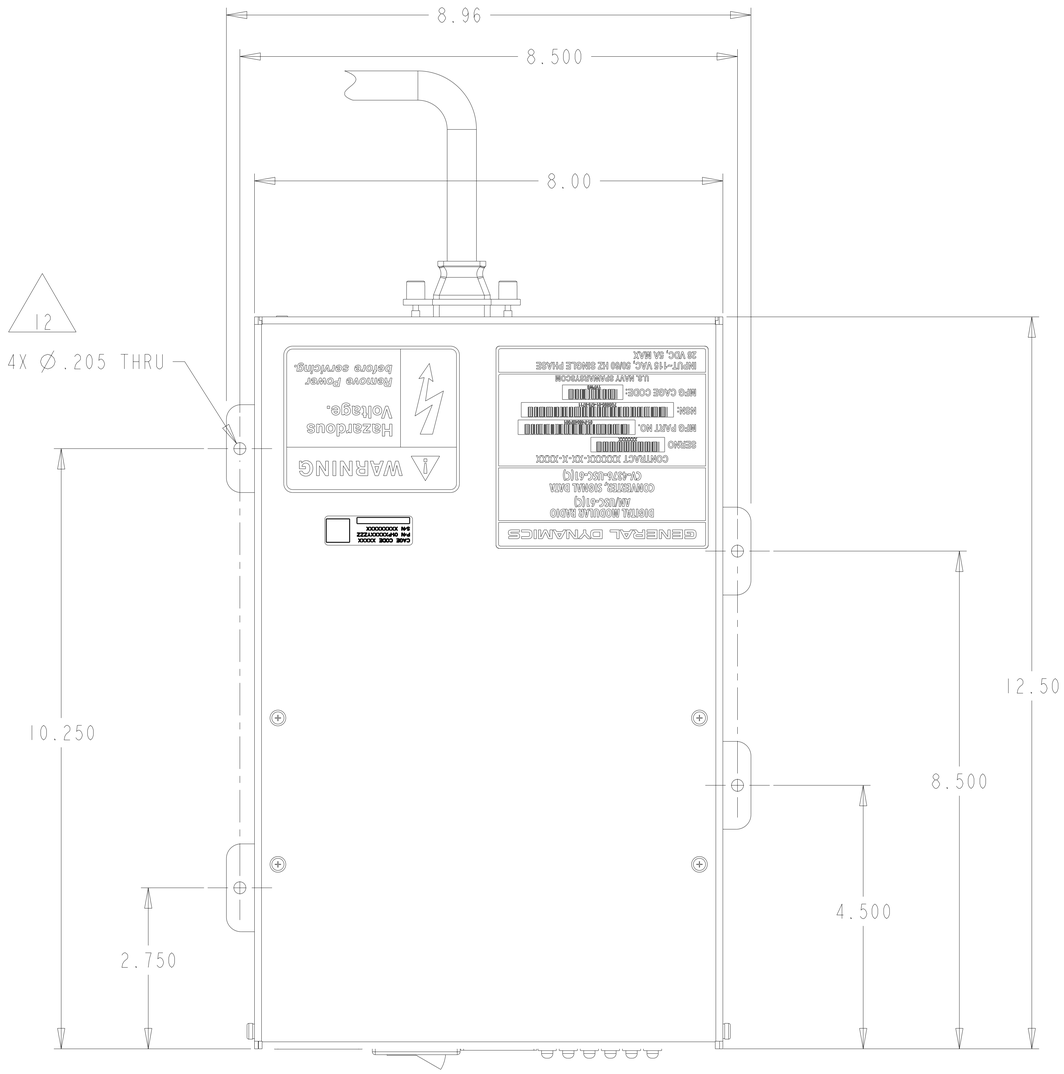

DIMENSIONS OF CIA MOUNTING HOLES TO RACK ADAPTER
NOTE: CUSTOM RACK ADAPTER REQUIRED PER SPECIFIC RACK OUTLINE

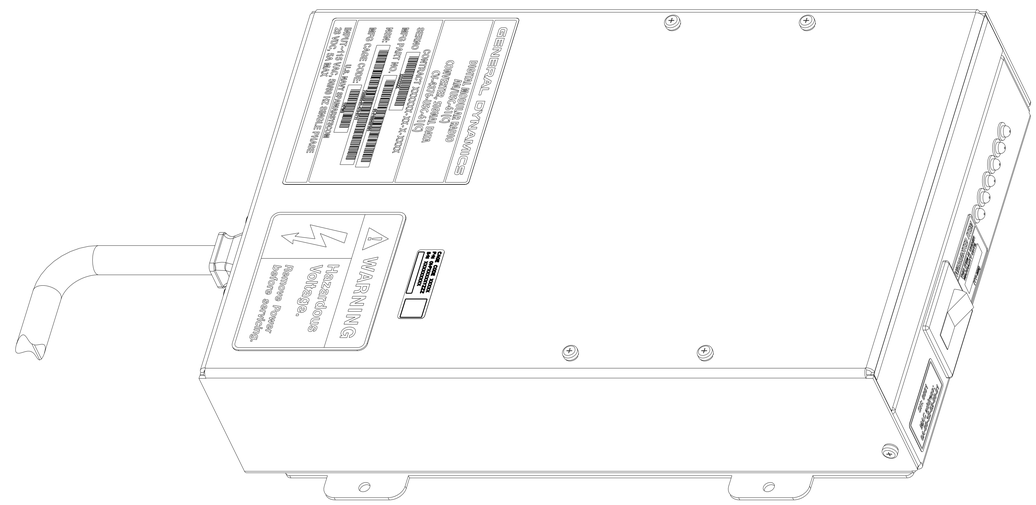

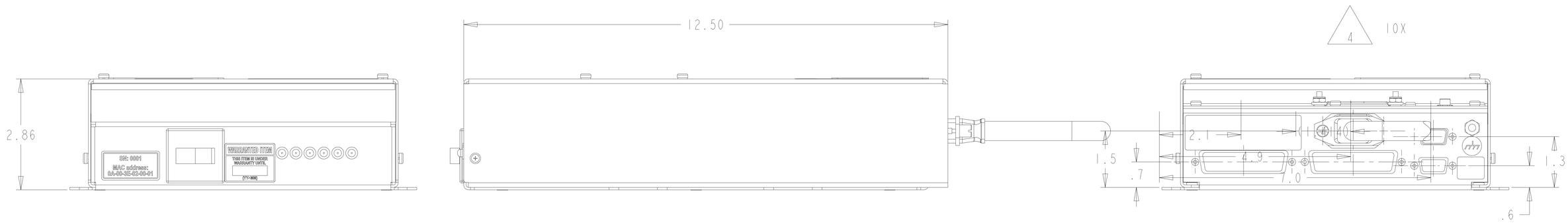

CIA MAXIMUM WEIGHT: 5.0 POUNDS

SIZE	CAGE CODE	DWG NO	REV
E	94990	70-P45956F	XD
SCALE 1.000	WT		SHEET 7 OF 9

DWG NO 70-P45956F SH 7

ASME Y14.1-1995 DRAWING FORMAT - 3/97

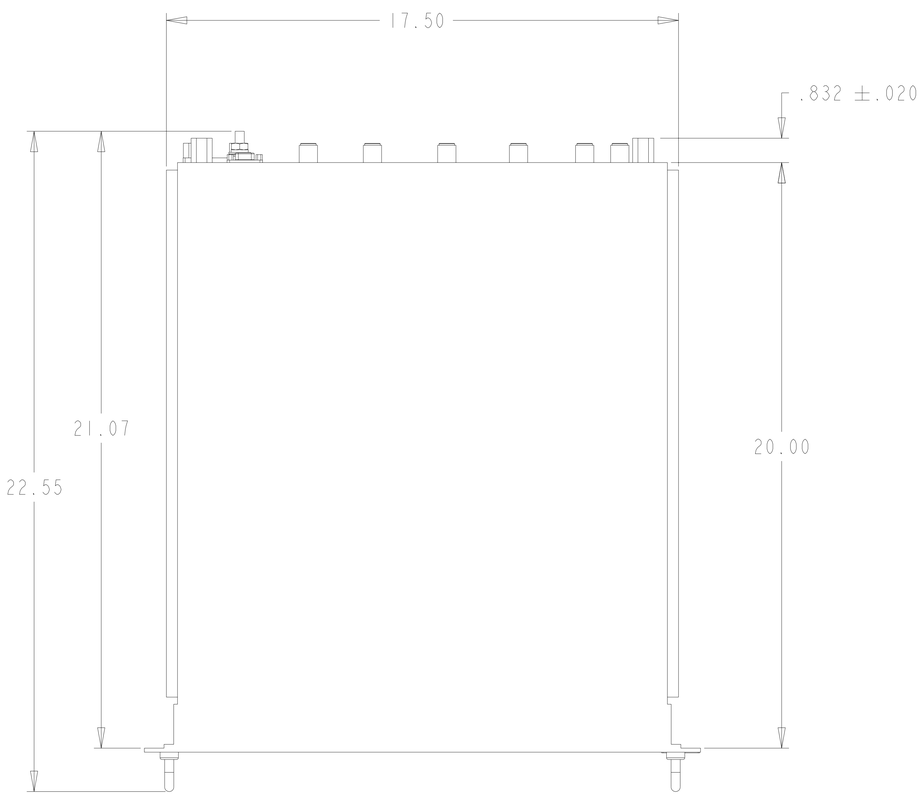

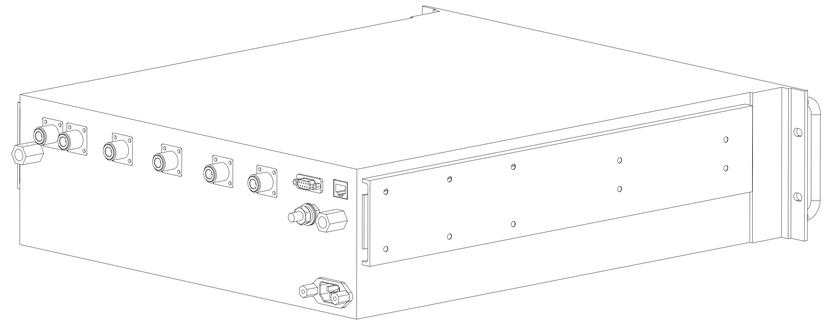

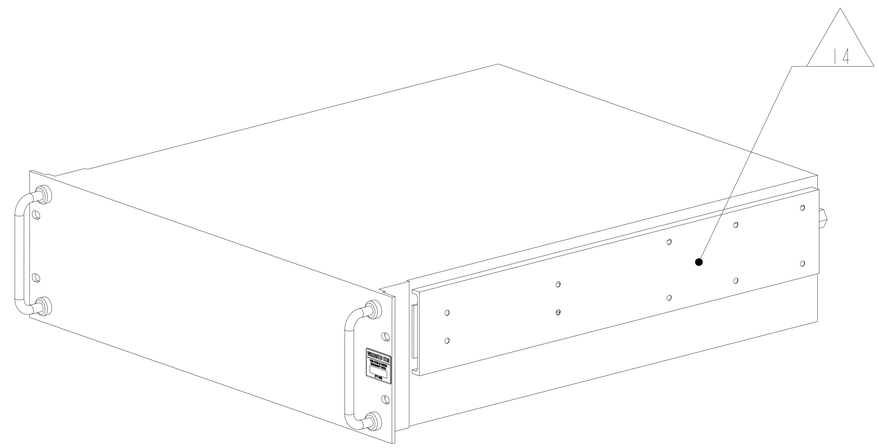

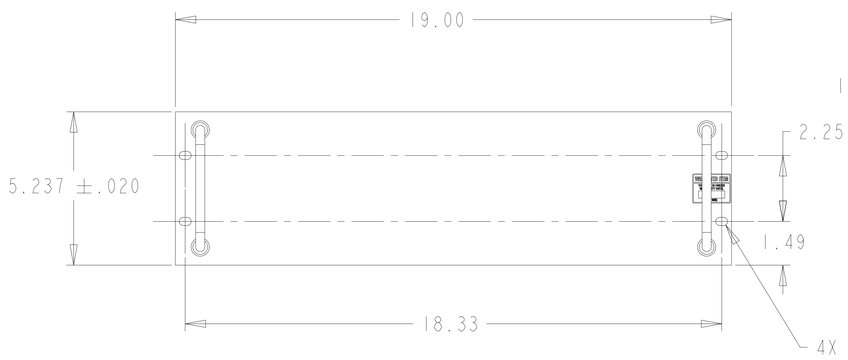

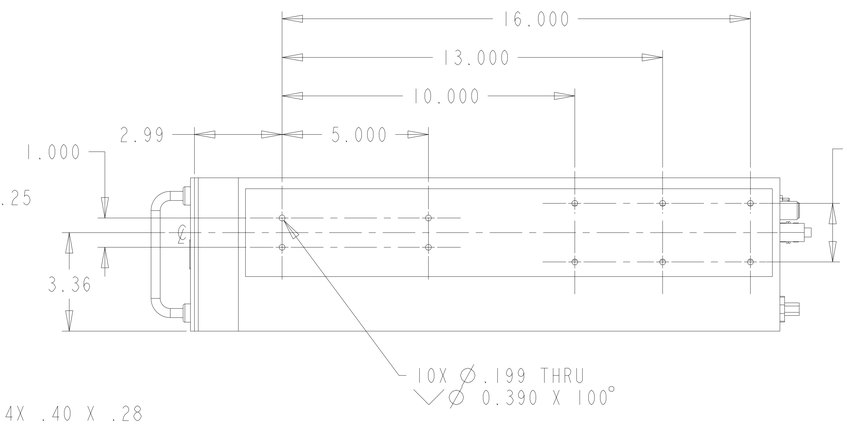

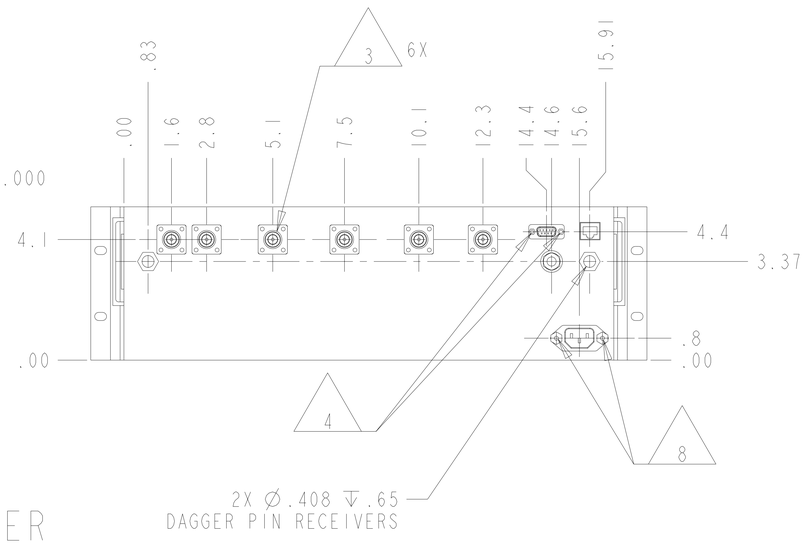

SUGGESTED DAGGER PIN:
JONATHAN P/N: 210012-406

DIMENSIONS OF 200 WATT POWER AMPLIFIER MOUNTING HOLES TO RACK ADAPTER

NOTE: CUSTOM RACK ADAPTER REQUIRED PER SPECIFIC RACK OUTLINE

POWER AMPLIFIER MAXIMUM WEIGHT: 55 POUNDS

SIZE	CAGE CODE	DWG NO	REV
E	94990	70-P45956F	XD
SCALE 1.000	WT	SHEET 8 OF 9	

DWG NO 70-P45956F SH 8

ASME Y14.1-1995 DRAWING FORMAT - 3/97

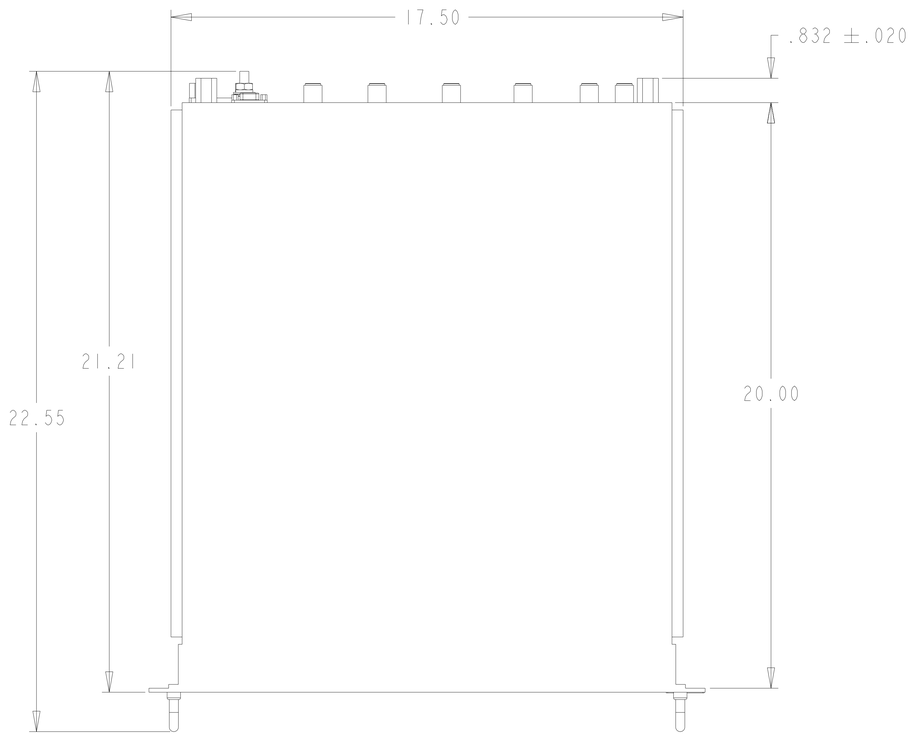

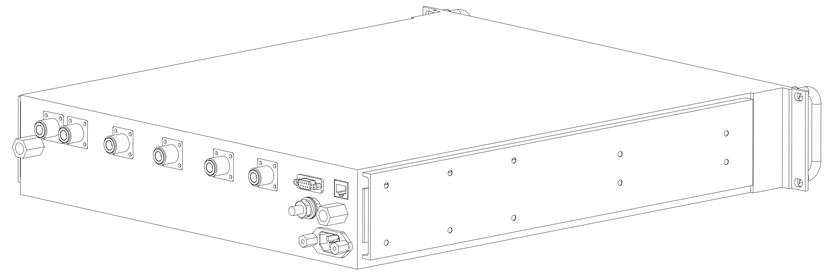

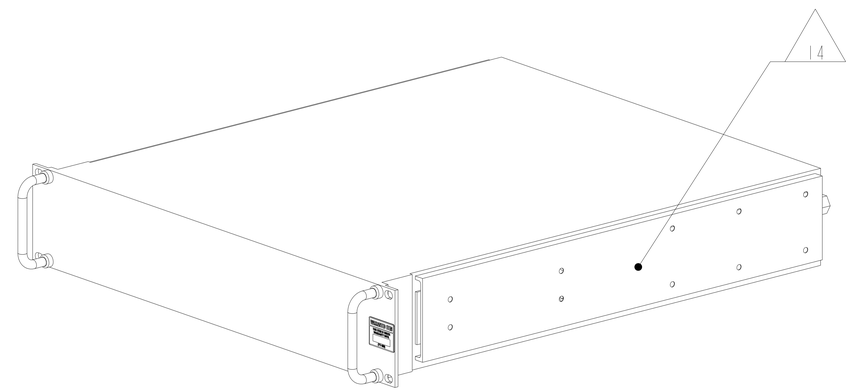

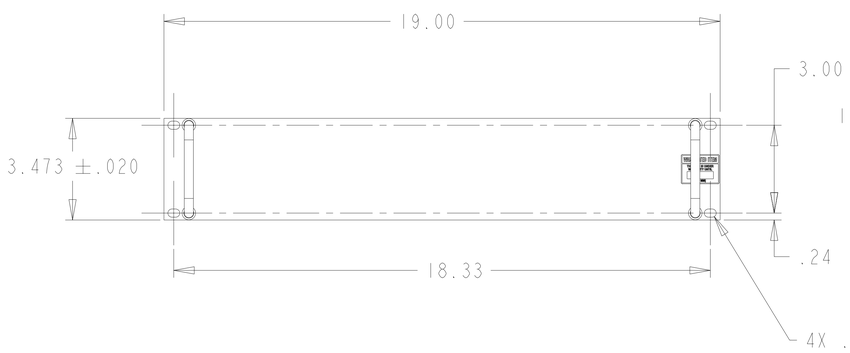

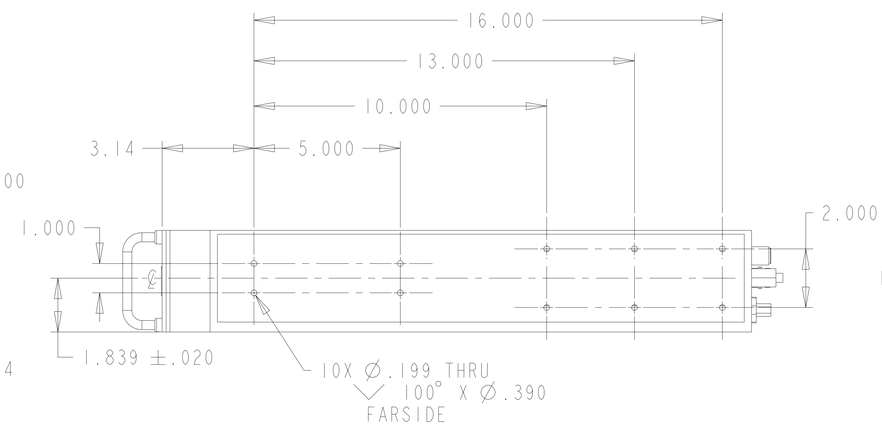

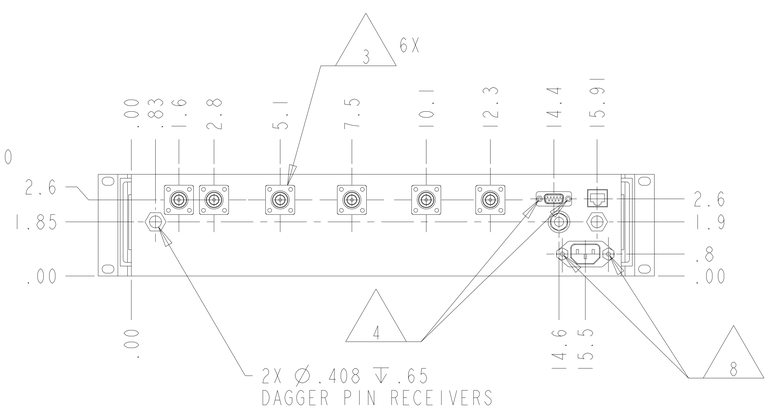

SUGGESTED DAGGER PIN:
JONATHAN P/N: 210012-406

DIMENSIONS OF 100 WATT POWER AMPLIFIER MOUNTING HOLES TO RACK ADAPTER

NOTE: CUSTOM RACK ADAPTER REQUIRED PER SPECIFIC RACK OUTLINE

POWER AMPLIFIER MAXIMUM WEIGHT: 41 POUNDS

SIZE	CAGE CODE	DWG NO	REV
E	94990	70-P45956F	XD
SCALE 0.500	WT		SHEET 9 OF 9

DWG NO 70-P45956F SH 9

ASME Y14.1-1995 DRAWING FORMAT - 3/97